230/530 CA/W33

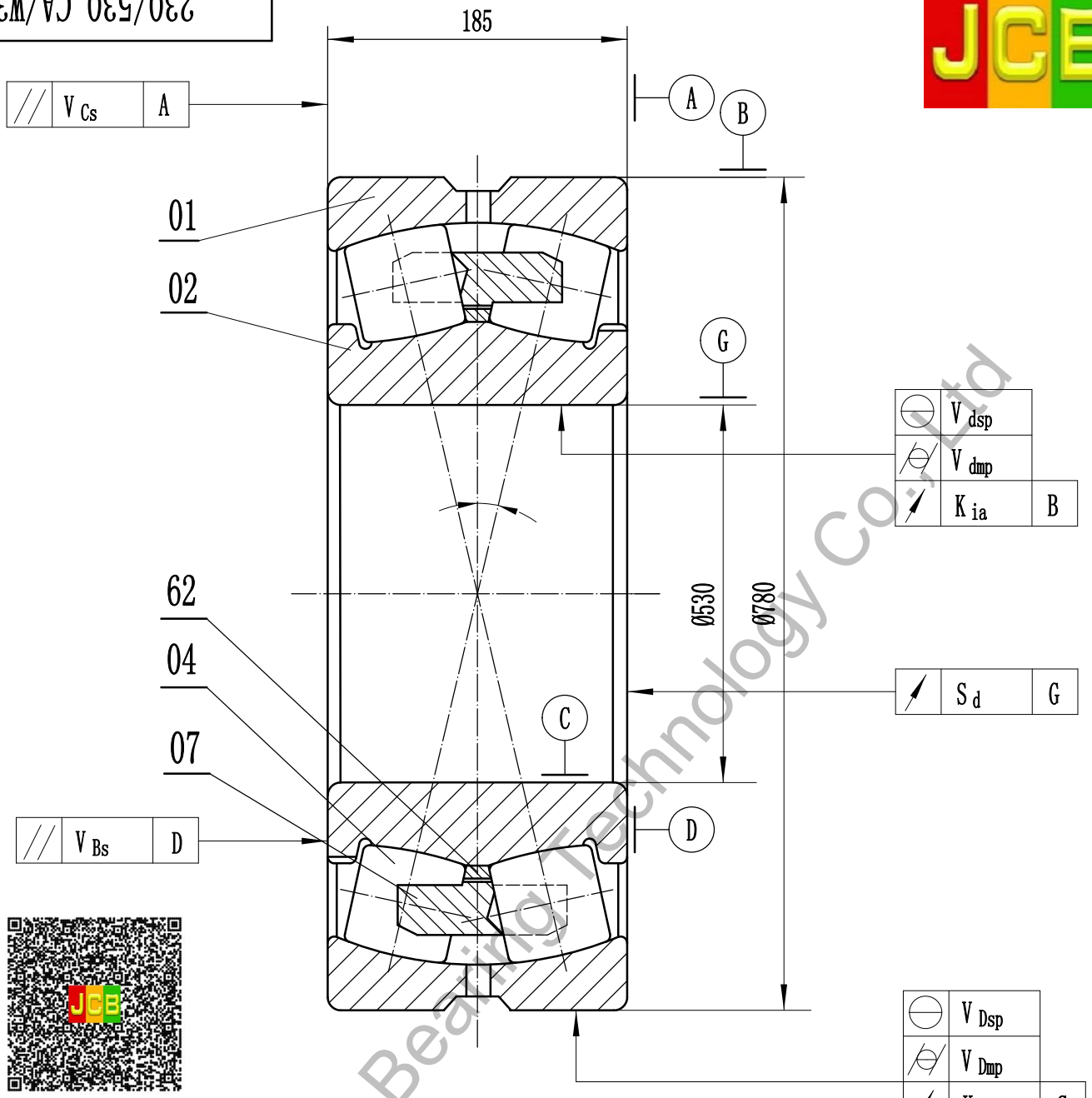

1、Tolerance of running accuracy are according to relevant state standard;

2、The value of the basic group of radial clearance:min **** max ****;

3、Rated load: Cr= **** kN Cor= **** kN。

No.	Designation	Qty	Material	unit Weight (kg)	toatl Weight (kg)	Remark
62	Guide ring		Steel 20—GB/T699			
07	Cage		Brass CuZn39Pb2-EN 1652:1997			
04	Roller		Steel 100CrMnSi6-4—ISO 683-17:1999			
02	Inner ring		Steel 100CrMnSi6-4—ISO 683-17:1999			
01	Outer ring		Steel 100CrMnSi6-4—ISO 683-17:1999			

Luoyang JCB Bearing Technology Co., Ltd
Contact information
Company Address : No. 285, Fenghua road,
Luoyang, Henan, China.
Postal code : 471000
Phone :86-379-68611678
Fax : 86-379-68611679
E-mail: sales@jcb-bearing.com
Reserved E-mail: sales@sphericalrollerbearing.net
Website: www.jcb-bearing.com
www.sphericalrollerbearing.net

Spherical Roller Bearing

230/530 CA/W33

				Weight(kg)	Scale
S					——

Total page 5 | Page No. 1

Luoyang JCB Bearing Technology Co., Ltd

Luoyang JCB Bearing Technology Co., Ltd